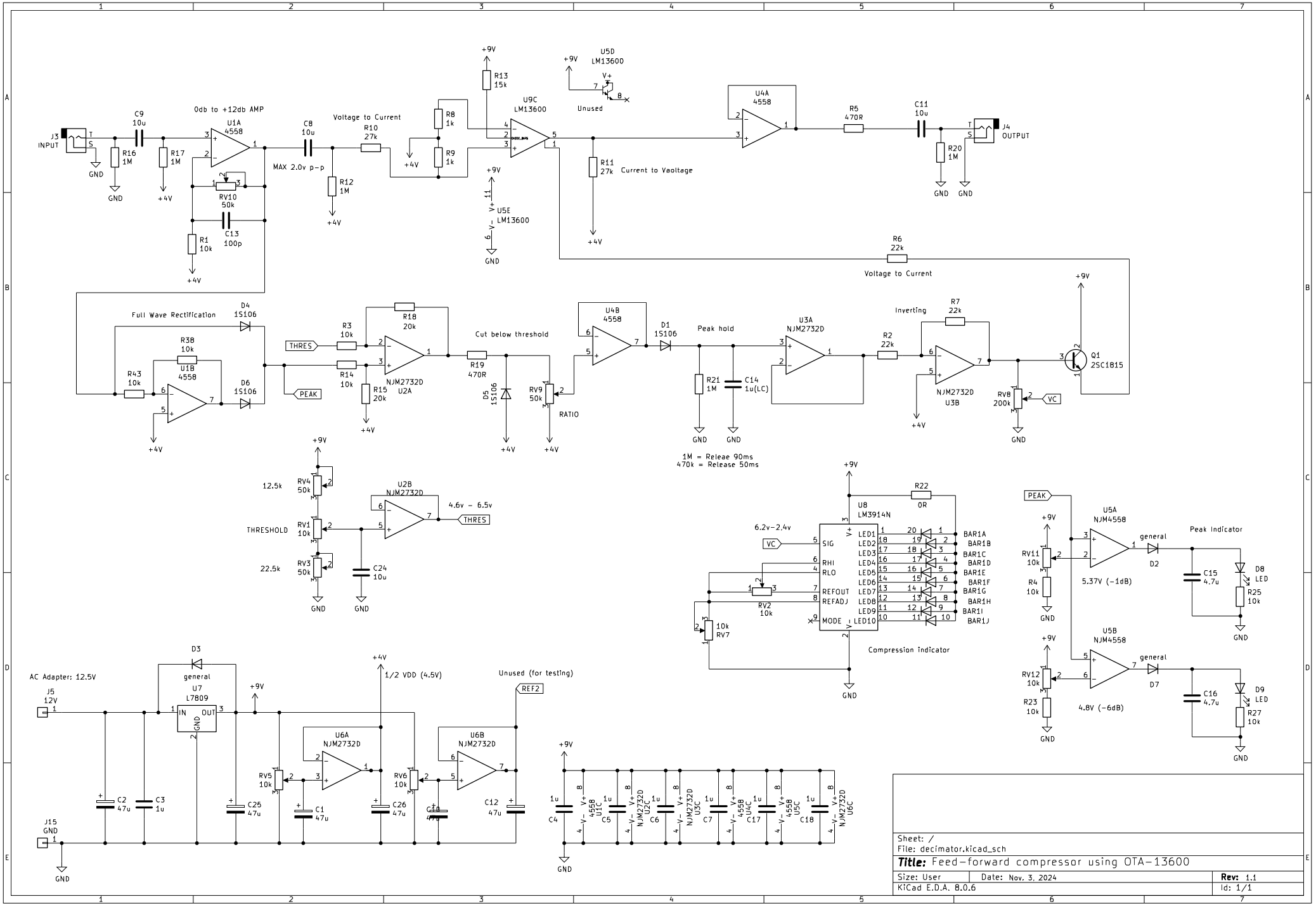
J3
INPUT
C9
10u
R16
1M
R17
1M
0db to +12db AMP
U1A
4558
RV10
50k
C13
100p
R1
10k
C8
10u
MAX 2.0v p-p
R12
1M
Voltage to Current
R10
27k
R8
1k
R9
1k
R13
15k
U9C
LM13600
U5D
LM13600
Unused
U5E
LM13600
R11
27k
Current to Vaoltage
U4A
4558
R5
470R
C11
10u
R20
1M
J4
OUTPUT
R6
22k
Voltage to Current
Full Wave Rectification
D4
1S106
R38
10k
U1B
4558
R43
10k
D6
1S106
THRES
PEAK
R3
10k
R14
10k
R18
20k
R15
20k
NJM2732D
U2A
Cut below threshold
R19
470R
D5
1S106
RV9
50k
RATIO
U4B
4558
D1
1S106
Peak hold
R21
1M
C14
1u(LC)
1M = Releae 90ms
470k = Release 50ms
U3A
NJM2732D
R2
22k
Inverting
R7
22k
NJM2732D
U3B
RV8
200k
VC
Q1
2SC1815
12.5k
RV4
50k
THRESHOLD
RV1
10k
22.5k
RV3
50k
U2B
NJM2732D
4.6v - 6.5v
C24
10u
R22
0R
U8
LM3914N
6.2v-2.4v
SIG
RHI
RLO
REFOUT
REFADJ
MODE
RV2
10k
RV7
10k
BAR1A
BAR1B
BAR1C
BAR1D
BAR1E
BAR1F
BAR1G
BAR1H
BAR1I
BAR1J
Compression indicator
U5A
NJM4558
RV11
10k
R4
10k
5.37V (-1dB)
D2
C15
4.7u
D8
LED
R25
10k
U5B
NJM4558
RV12
10k
R23
10k
4.8V (-6dB)
D7
C16
4.7u
D9
LED
R27
10k
AC Adapter: 12.5V
J5
12V
D3
U7
L7809
1/2 VDD (4.5V)
Unused (for testing)
REF2
U6A
NJM2732D
U6B
NJM2732D
RV5
10k
RV6
10k
C2
47u
C3
1u
C25
47u
C1
47u
C26
47u
C12
47u
J15
GND
C4
1u
C5
1u
C6
1u
C7
1u
C17
1u
C18
1u
U1C
4558
U2C
NJM2732D
U3C
NJM2732D
U4C
4558
U5C
4558
U6C
NJM2732D
Sheet: /
File: decimator.kicad_sch
Title: Feed-forward compressor using OTA-13600
Size: User
Date: Nov. 3, 2024
Rev: 1.1
KiCad E.D.A. 8.0.6
Id: 1/1